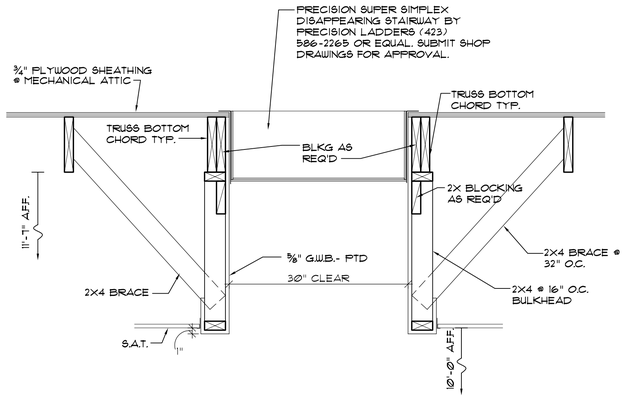

3/A-17 ATTIC ACCESS LADDER DETAIL

SCALE: 1"=1'-0"

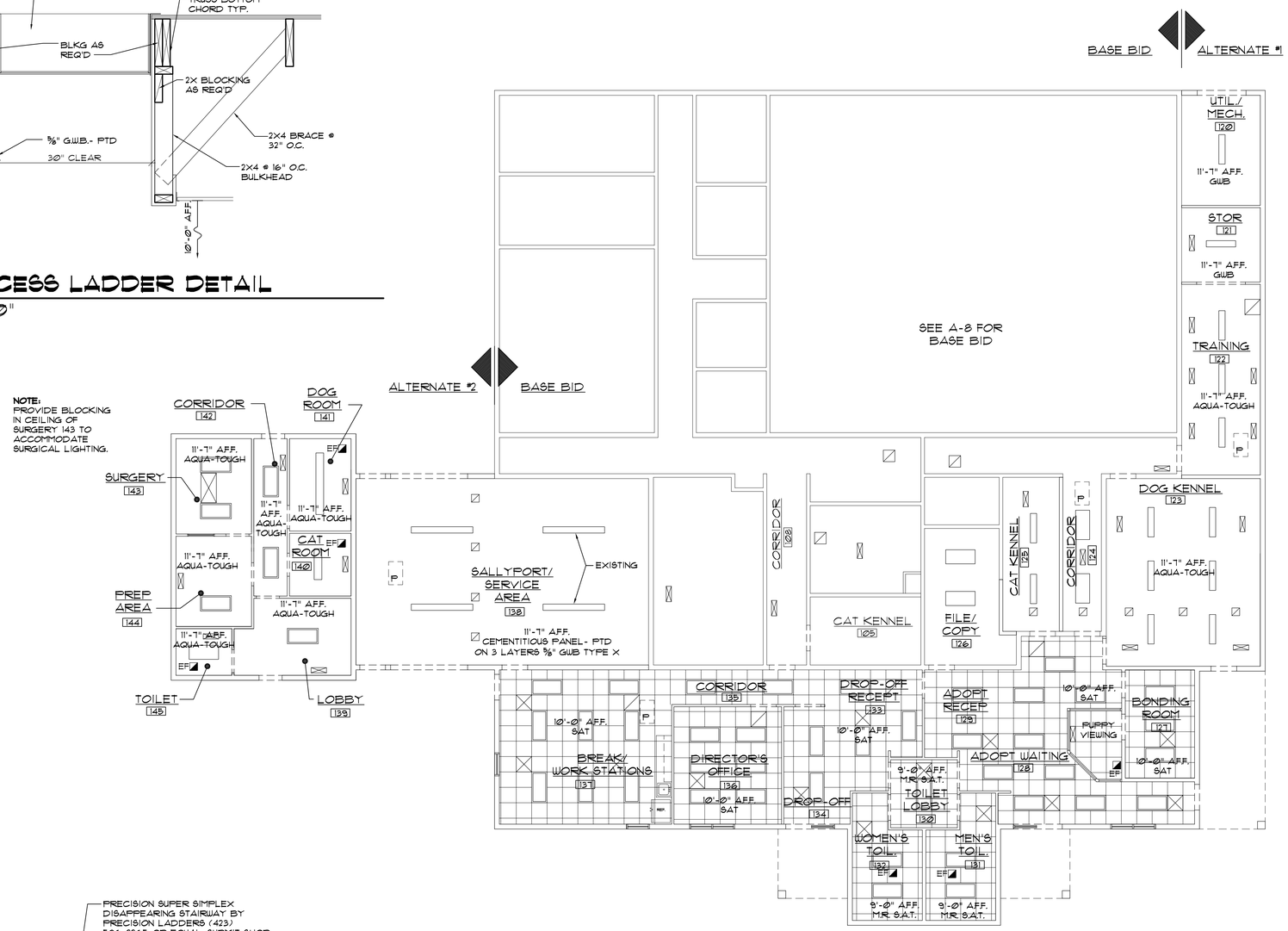

LEGEND

- 4' CEILING MOUNTED FLUORESCENT FIXTURE
- 4' SURFACE MOUNTED FLUORESCENT FIXTURE
- 4' FLUORESCENT STRIP
- 8' FLUORESCENT STRIP
- P ATTIC ACCESS PANEL ABOVE

NOTE:
SEE SHEET G-3 FOR DRAFTSTOPPING LOCATIONS AND NOTES

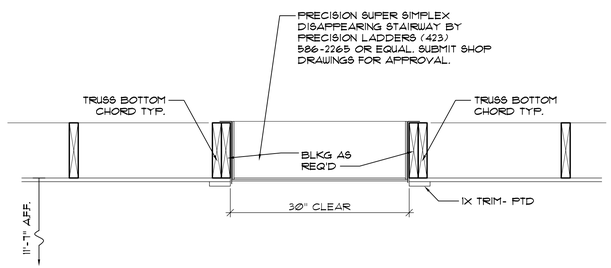

2/A-17 ATTIC ACCESS PANEL DETAIL

SCALE: 1"=1'-0"

1/A-17 REFLECTED CEILING PLAN (ALTERNATE)

SCALE: ⅛"=1'-0"

ALTERNATE

4206 Bridges Street Extension, Suite C
Morehead City, North Carolina 28557
Telephone: 252-247-2727 Fax: 252-247-2904
Email: eda@EDApa.com

EDA pa
Architects □ Engineers □ Planners
Raleigh
Morehead City

USE OF THIS DRAWING, SPECIFICATIONS, AND OTHER DOCUMENTS:
These drawings, specifications, and other documents are the property and are instruments of service for use solely with respect to this project. The Owner shall be permitted to maintain one copy of these documents for information and reference in connection with the Owner's use and occupancy of the project. No portions of the drawings or other documents shall be reproduced or used without written consent by the EDA pa.

ROCKINGHAM COUNTY ANIMAL FACILITY
WENTWORTH, NORTH CAROLINA

REFLECTED CEILING PLAN (ALTERNATE)

2008409

ISSUED: 08 DEC. 09
DWG BY: LSA
CKD BY: LDD,CLW
REVISIONS

SHEET NO.
A-17
OF